RoHS Compliant

REV.	Revision note	Date	Signature	Che
1.0	Release to product	18/03/29	NDQ	

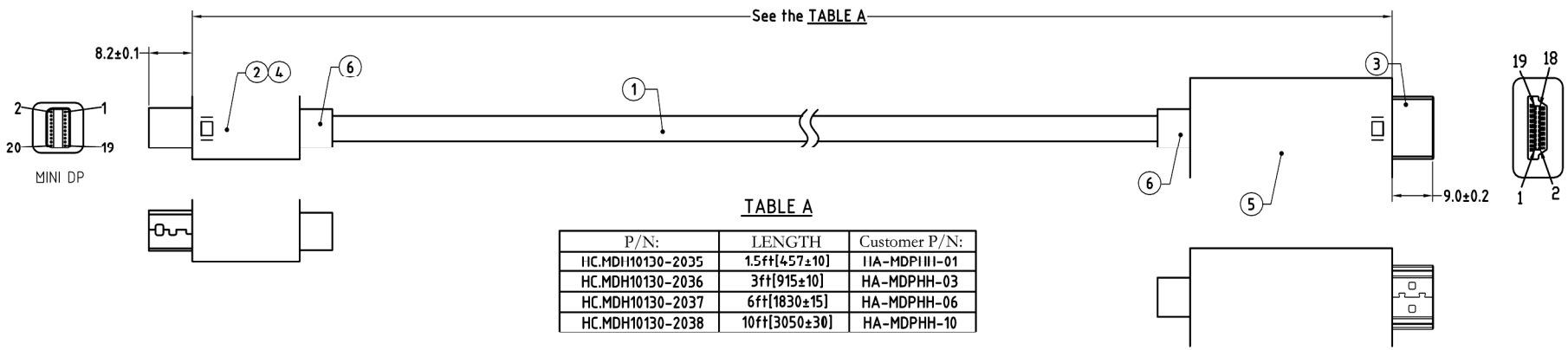

TABLE A

P/N:	LENGTH	Customer P/N:
HC.MDH10130-2035	1.5ft[457±10]	HA-MDPHH-01
HC.MDH10130-2036	3ft[915±10]	HA-MDPHH-03
HC.MDH10130-2037	6ft[1830±15]	HA-MDPHH-06
HC.MDH10130-2038	10ft[3050±30]	HA-MDPHH-10

PIN ASSIGNMENT

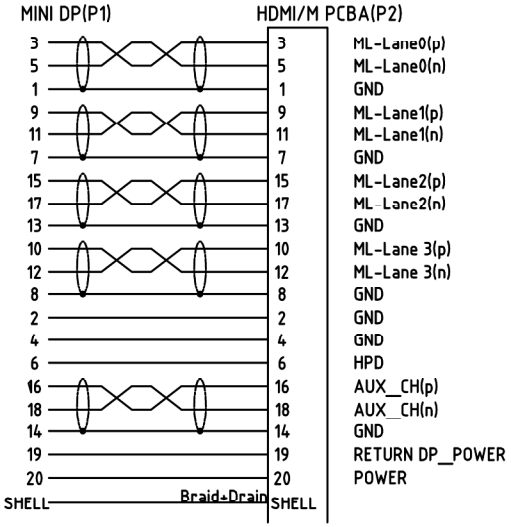

Electrical character:

1)100% Open/short/Intermittent testing
2)Withstanding voltage:DC/AC 300V AT 10ms.
3)Insulation resistance:10M Ohm(min)
4)Residual operating current:
a.<1.M=0.5mA; b.1.0~2.0M=1.0mA;
c.2.0~3.0M=2.0mA; d.3.0~5.0M=3.0mA;
e.5.0~10M=5.0mA; f.10~15M=7.0mA;
5)Conductive resistance:5 Ohm max

6)Supports 4K/30Hz

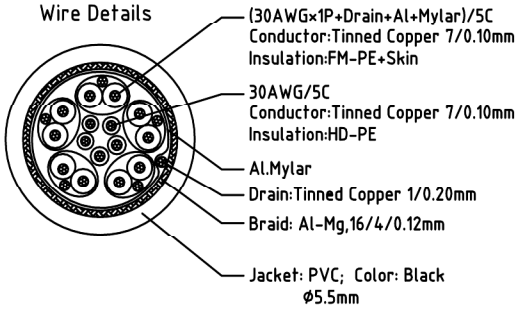

NO.	PART NAME	SPEC DESCRIPTION	PART P/N	REMARK
6	SR MOLDING	PVC,45Pa,Black	------	
5	Shell	HDMI Male Black ABS Shell(Twinset Type)	------	
4	Shell	Mini DP Male Black ABS Shell(Twinset Type)	------	
3	Conn	HDMI Male,Pin G/F,Black Insulation,Shell(G/F Plated),Solder type PCBA:PS8402A	------	
2	Conn	Mini DisplayPort Male,Pin G/F,White Insulation,Shell(G/F Plated),Solder type	------	
1	Cable	(30#TC×1P+D+M+A)×5+30#TC×5C+A+E+B(16/4/0.12,Al-Mg)+PVC,Black,OD:5.5mm	------	

Mould number:	Customer: M018UA	Customer P/N: See the TABLE A		Article No./ HL-GC-001	
	Designed by: NDQ	Checked by:	Approved by	File number: D-2035~2038	Date: 18/03/29	Scale: none
Packing file:	**My Cable Mart**	Name: Mini DP M TO HDMI M Cable			
	This drawing contains information that is proprietary to Hailink Electronics Limited incorporated and should not be used without written permission	P/N: HC.MDH10130-2035~2038		Edition: 1.0	Shee 1/2